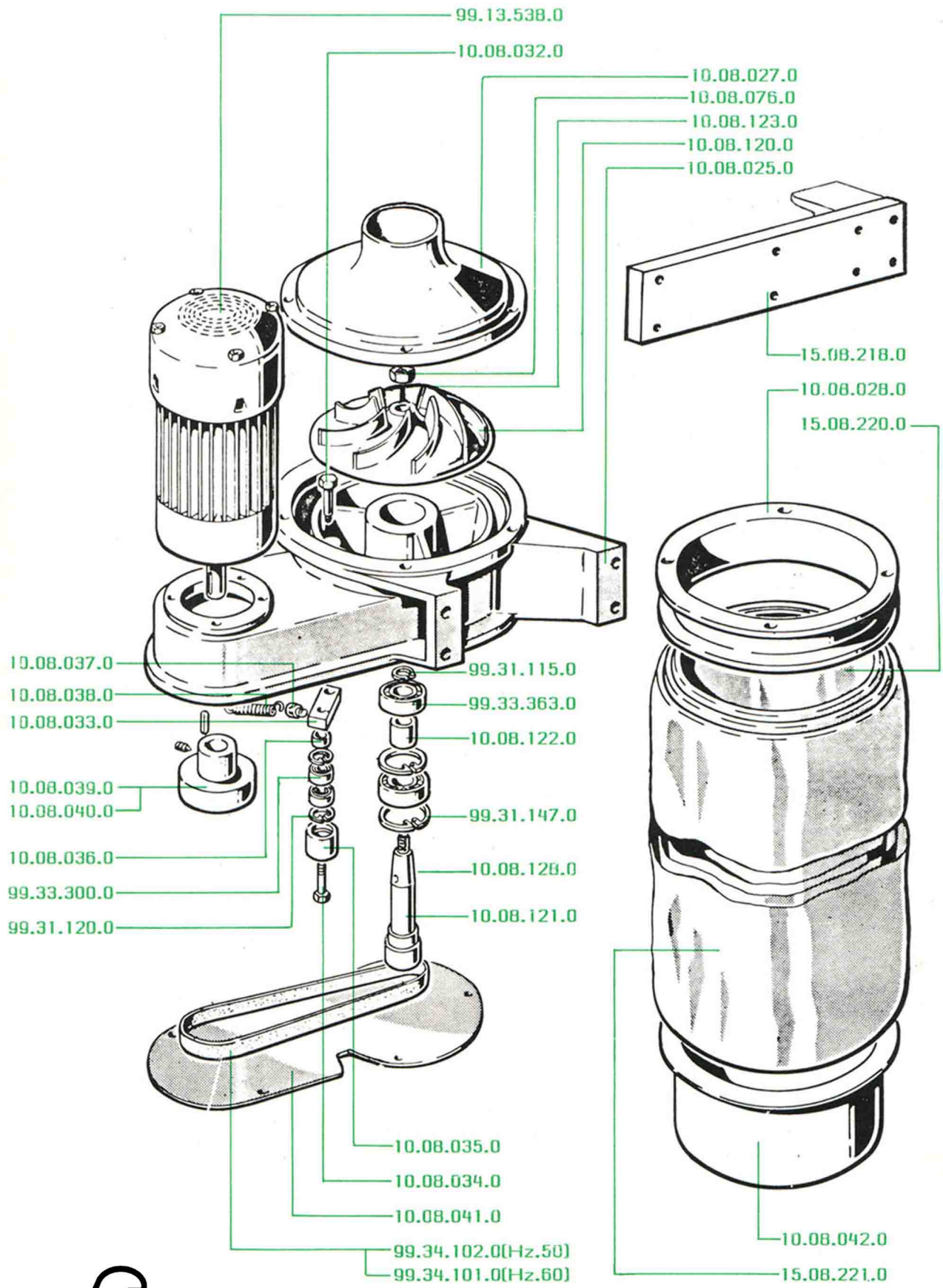

www.gideonsmachine.com